# IMU488M

## High Performance Inertial Measurement Unit

## Main Features

- Precision 10DoF IMU, Pin to Pin Replace ADIS16488
- Range (Typical): Gyro ±450°/s, Accel ±16g
- Bias Instability (Allan): Gyro: 1° /h, Accel 30μg
- Bias Repeatability: Gyro: 2° /h, Accel 30μg
- Full Temperature Range Accuracy Assured
- High Bandwidth (Typical) : 200Hz
- UART and SPI, SPI Output Rate up to 2000Hz
- Compact & Light Weight 47×44×14mm, < 50g
- Working Temperature: -40~+85°C

IMU488M Inertial Measurement Unit is a high performance tactical grade MEMS Inertial Measurement Unit, which MEMS gyroscope enjoys 1°/h (Allan) bias instability and MEMS accelerometer enjoys 30μg (Allan) bias instability, and it can output precise 3 axis outputs of angular rate, 3 axis acceleration data, 3 axis magnetometer data, and barometer data, etc.

IMU488M Inertial Measurement Unit adopts latest MEMS technology and advanced MEMS components, and IMU488M has been produced in bulk, which reduces the cost deeply. IMU488M enjoys excellent measurement performance, small size, light weight, and high reliability and robustness, it can output precise measurement data in harsh environment, and it has been widely applied in tactical unmanned aerial vehicles, surface vehicle, platform stabilization, industrial robotics, etc.

- ✓ **12-Step Quality Control, Super Reliability, Suitable for Applications in Harsh Environment**
- ✓ **Adopting Original Big Brand Component, High-class Material, Competitive Price**
- ✓ **Real Actual Precise with Strict Factory Calibration, Perfect Performance**
- ✓ **Successful Applications in Tens of Fields, More than 1000 Customers are Using**

## Typical Applications

Unmanned Aerial Vehicles

Industrial Robotics

Unmanned Surface Vessel

Platform Stabilization



www.SkyMEMS.com Mobile: +86 133 7203 8516
Skype: skymems

Copy Right Reserved © 2024 Nanjing Sky MEMS Technology co., ltd.

# IMU488M

## High Performance Inertial Measurement Unit

## Technical Specifications

| Parameter | Test Condition | Min. | Typical | Max. | Unit |
|---|---|---|---|---|---|
| **Gyroscopes** | | | | | |
| Range① | | | ±450 | | °/s |
| Bias Instability | Allan variance | | 1 | | °/h |
| | 10s average(-40~+85°C, fixed temp.) | 2 | 3 | 4 | °/h |
| Bias Repeatability | | | 2 | | °/h |
| Random Walk | | | 0.1 | | °/√h |
| Bais | Bias change at full temp. range② | | ±0.04 | | °/s |
| | Bias change in vibration conditions③ | | 6 | | °/h |
| Non-linearity | | | 100 | | ppm |
| Bandwidth | | | 200 | | Hz |
| **Accelerometers** | | | | | |
| Range① | | | ±16 | | g |
| Bias Instability | Allan variance | | 30 | 45 | ug |
| | 10s average(-40~+85°C, fixed temp.) | | 60 | | ug |
| Bias Repeatability | | | 60 | | ug |
| Random Walk | | | 0.01 | | m/s/√h |
| Non-linearity | | | 100 | | ppm |
| Bandwidth | | | 200 | | Hz |
| **Magnetometer** | | | | | |
| Dynamic Range | | ±2 | | | Gauss |
| Resolution | | | 120 | | uGauss |
| Noise RMS | 10Hz | | 50 | | uGauss |
| Bandwidth | | | 200 | | Hz |
| **Barometer** | | | | | |
| Pressure Range | | 450 | | 1100 | mbar |
| Resolution | | | 0.1 | | mbar |
| Absolute Accuracy | | | 1.5 | | mbar |
| **Interface** | | | | | |
| *UART*④ | | | | | |
| Baud Rate | | | 230400 | | bps |
| Output Rate | | | 200 | | Hz |
| *SPI* | | | | | |
| Serial clock frequency | | | | 25 | MHz |
| Output Rate | | | 2000 | | Hz |
| **Reliability** | | | | | |
| MTBF | 20000 h | | | | |
| Continuous Working Time | 120 h | | | | |


Copy Right Reserved © 2024 Nanjing Sky MEMS Technology co., ltd.
Focus on MEMS Measurement & Control Technologies, Products include:
MEMS Accelerometer MEMS Gyro Inclinometer E-compass
IMU Vertical Gyro AHRS GNSS/INS Fiber Optical Gyro

# IMU488M

## High Performance Inertial Measurement Unit

## Technical Specifications

| Parameter | Test Condition | Min. | Typical | Max. | Unit |
|---|---|---|---|---|---|
| **Electrical Features** | | | | | |
| Supply Voltage | 3.3 V | | | | |
| Power Consumption | 0.15 W | | | | |
| Ripple Wave | 100mV (P-P) | | | | |
| **Environment Conditions** | | | | | |
| Operating Temperature | -40°C ~ 85°C | | | | |
| Storage Temperature | -55°C ~ 105°C | | | | |
| Vibration Resistance | 20-2000Hz, 6.06g | | | | |
| Shock Resistance | 1000g, 0.5ms | | | | |
| **Physical Parameter** | | | | | |
| Size | 47 × 44 × 14 mm | | | | |
| Weight | 50grams | | | | |
| Connector | 2 × 12 pins | | | | |

Note:

①: The range of Gyroscopes and Accelerometers can be configured in our factory.

②: The bias value is calculated based on the whole temperature change period, the temperature changing rate<=2°C/minute, temperature range:-40~+85°C;

③: (before vibration average value +after vibration average value) /2-during vibration average value, the vibration conditions are 6.06g, 20~2000Hz

④: The baud rate and output rate can be configured in our factory.


Copy Right Reserved © 2024 Nanjing Sky MEMS Technology co., ltd.
Focus on MEMS Measurement & Control Technologies, Products include:
MEMS Accelerometer MEMS Gyro Inclinometer E-compass
IMU Vertical Gyro AHRS GNSS/INS Fiber Optical Gyro

# IMU488M

## High Performance Inertial Measurement Unit

## Pins Definition

Pin Function Descriptions

| Pins No. | Name | Type | Description |
|---|---|---|---|
| 10，11，12 | VDD | power | |
| 13，14，15 | GND | power | |
| 7 | DIO1 | Input/output | |
| 9 | DIO2 | Input/output | |
| 1 | DIO3 | Input/output | Set DIO3 (pin1) as the enabling port of the serial port output, when DIO3 is high level, the serial port outputs data normally, if DIO3 is low level, the serial port will not output data. |
| 2 | DIO4 | Input/output | set DIO4 (pin 2) as data ready |
| 3 | SPI-CLK | input | SPI, master/slave mode can be set, the default mode is slave mode for CS, only when CS port pull down low, then it output data, when it is high, no data output |
| 4 | SPI-MISO | output | |
| 5 | SPI-MOSI | input | |
| 6 | SPI-CS | input | |
| 19 | UART-0-TXD | output | UART0, baud rate can be set, the default is 230400bps |
| 21 | UART-0-RXD | input | |
| 8 | RST | input | reset |
| 23 | VDDRTC | power | |
| 16~18,20,22,24 | NC | reserved | Reserved by factory |


Copy Right Reserved © 2024 Nanjing Sky MEMS Technology co., ltd.
Focus on MEMS Measurement & Control Technologies, Products include:
MEMS Accelerometer MEMS Gyro Inclinometer E-compass
IMU Vertical Gyro AHRS GNSS/INS Fiber Optical Gyro

# IMU488M

## High Performance Inertial Measurement Unit

## Pins Definition

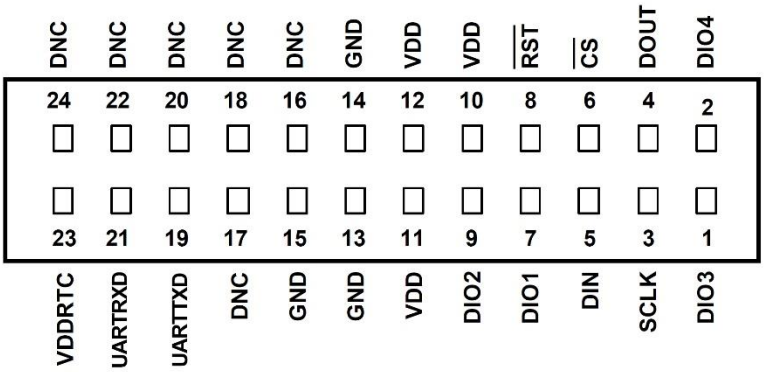


Mating Connector Pin Assignments

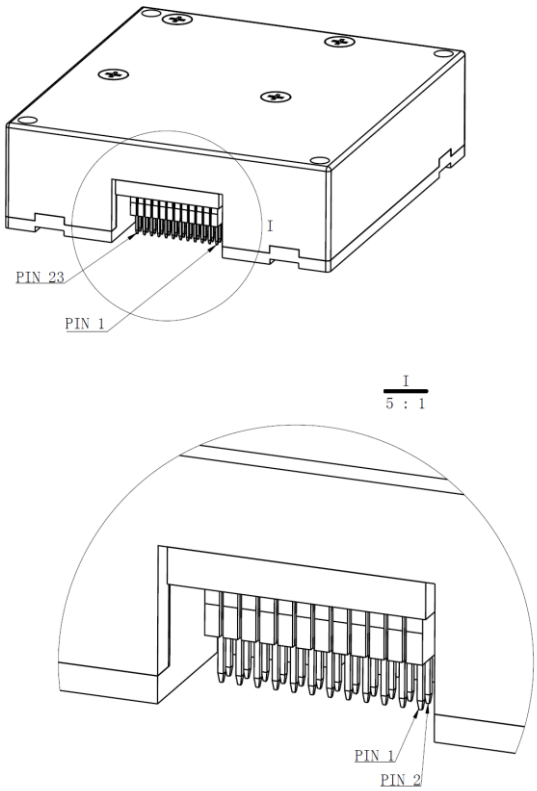


Axial Orientation (Top Side Facing Up)


Copy Right Reserved © 2024 Nanjing Sky MEMS Technology co., ltd.
Focus on MEMS Measurement & Control Technologies, Products include:
MEMS Accelerometer MEMS Gyro Inclinometer E-compass
IMU Vertical Gyro AHRS GNSS/INS Fiber Optical Gyro

# IMU488M

## High Performance Inertial Measurement Unit

## Dimension & Package

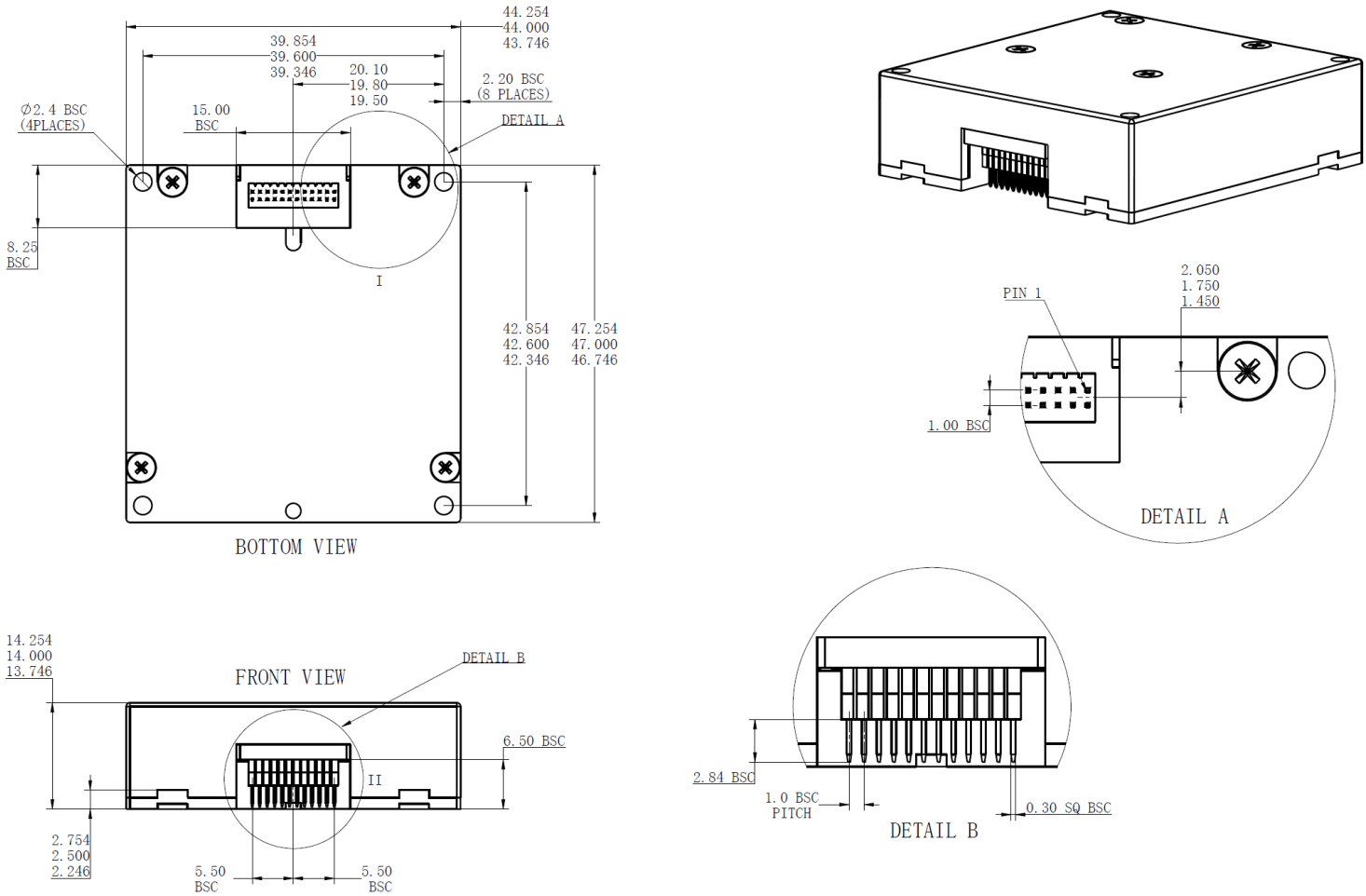


Three-view Drawing of IMU488M


Copy Right Reserved © 2024 Nanjing Sky MEMS Technology co., ltd.
Focus on MEMS Measurement & Control Technologies, Products include:
MEMS Accelerometer MEMS Gyro Inclinometer E-compass
IMU Vertical Gyro AHRS GNSS/INS Fiber Optical Gyro

# IMU488M

## High Performance Inertial Measurement Unit

## Installation

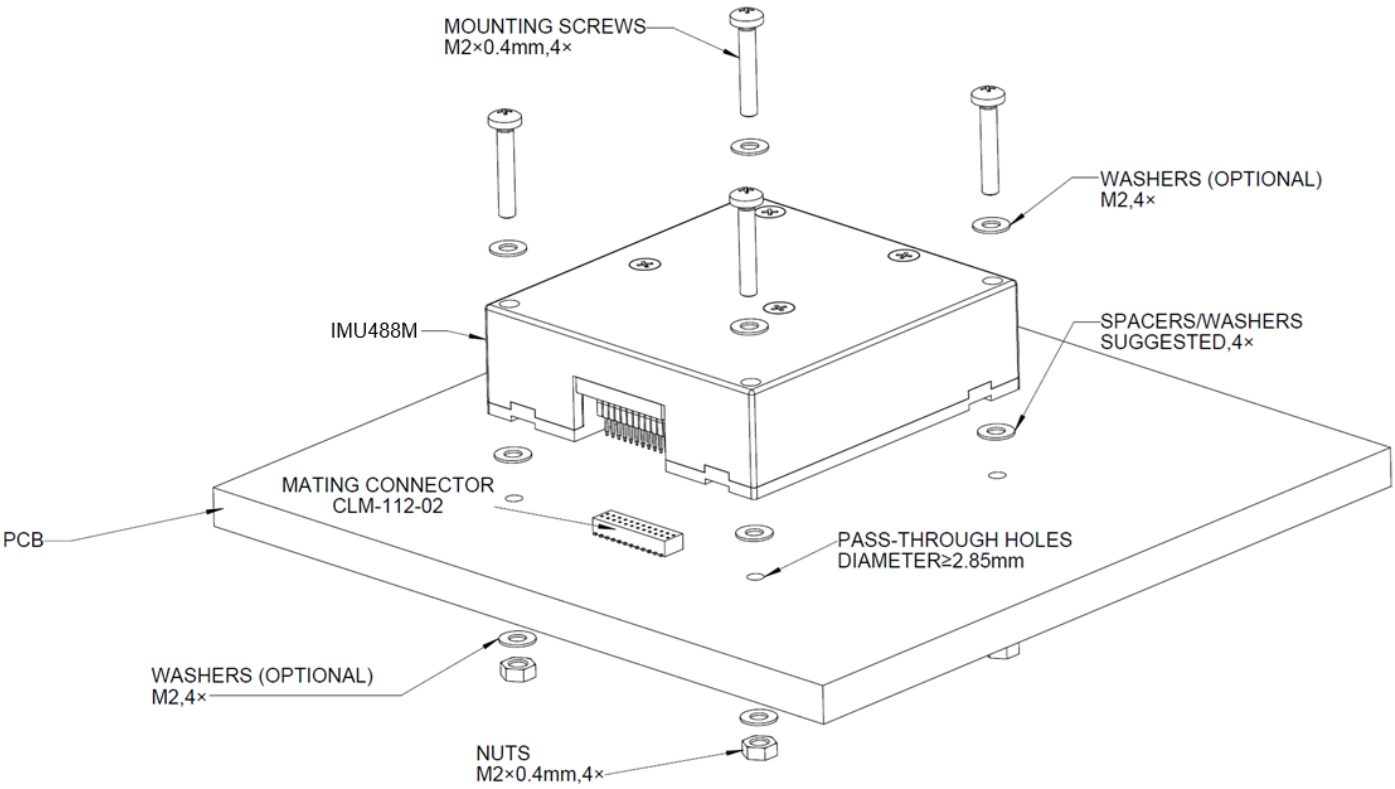


Mounting Example


Copy Right Reserved © 2024 Nanjing Sky MEMS Technology co., ltd.
Focus on MEMS Measurement & Control Technologies, Products include:
MEMS Accelerometer MEMS Gyro Inclinometer E-compass
IMU Vertical Gyro AHRS GNSS/INS Fiber Optical Gyro

# IMU488M

## High Performance Inertial Measurement Unit

## Coordinate System Definition

The coordinate system of 3 gyroscopes ($g_x$,$g_y$,$g_z$) and 3 accelerometers ($a_x$,$a_y$,$a_z$) are defined as the following figure, and the arrow direction is positive.

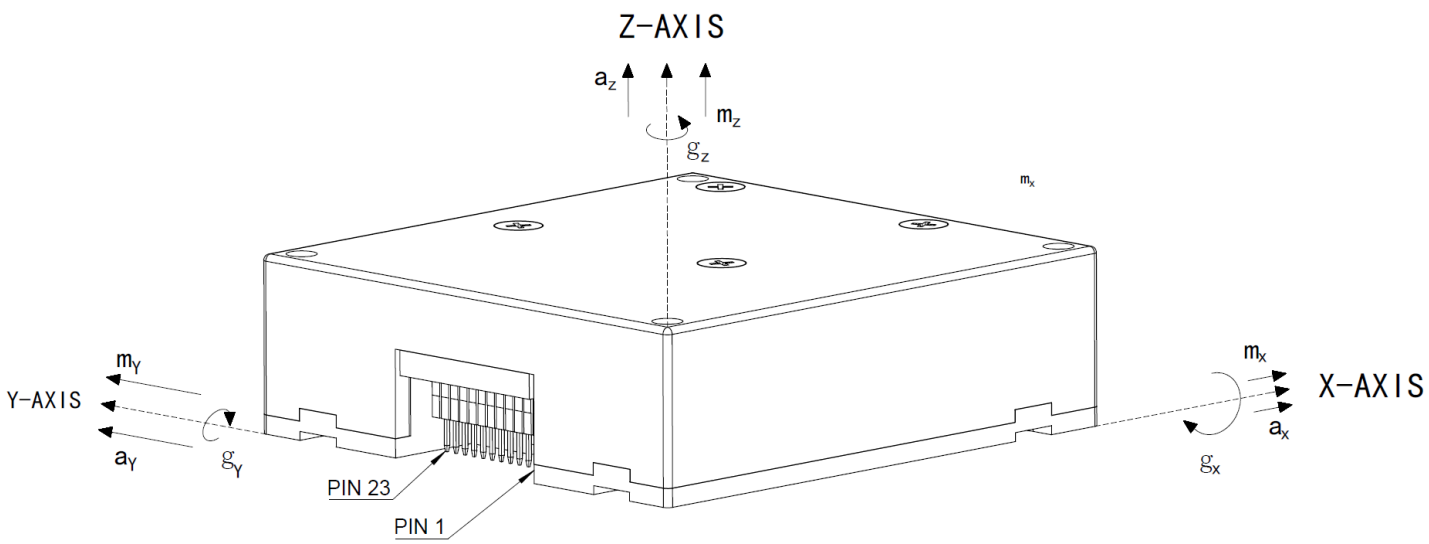


Inertial Sensor Direction Reference Diagram


Copy Right Reserved © 2024 Nanjing Sky MEMS Technology co., ltd.
Focus on MEMS Measurement & Control Technologies, Products include:
MEMS Accelerometer MEMS Gyro Inclinometer E-compass
IMU Vertical Gyro AHRS GNSS/INS Fiber Optical Gyro

## Communication Protocol - SPI

### SPI Read/Write Data

IMU488M is an autonomous sensor system, it will automatically start when there is a valid power supply. After completing the initialization process, it starts sampling, processing and loading the calibrated data into the output register, which can be accessed through the SPI interface. The SPI port is usually connected with the compatible port of the embedded processor.  the connection diagram refers to the following figure. Four SPI signals support synchronous serial data transmission. In the factory default configuration, the DIO4 pin provides a data ready signal; when new data is available in the output data register, this pin will turn to high level.

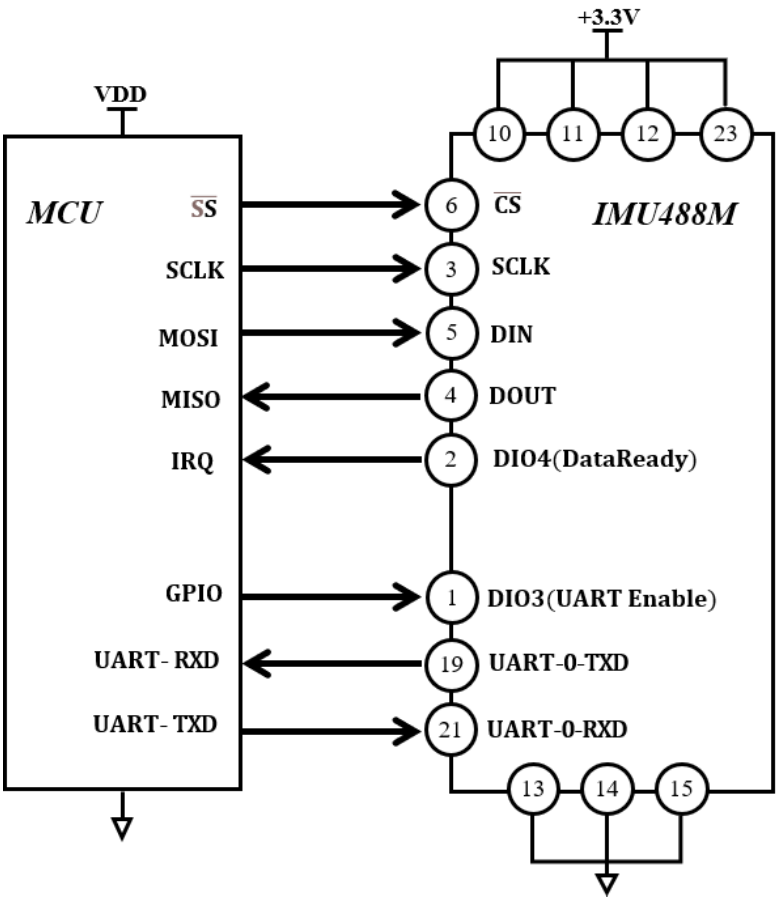


Connection diagram with external device


Copy Right Reserved © 2024 Nanjing Sky MEMS Technology co., ltd.
Focus on MEMS Measurement & Control Technologies, Products include:
MEMS Accelerometer MEMS Gyro Inclinometer E-compass
IMU Vertical Gyro AHRS GNSS/INS Fiber Optical Gyro

## Communication Protocol - SPI

### 1. General-purpose host processor SPI settings

| Processor Setting | Description |
|---|---|
| Host | IMU488M is used as slave |
| SCLK ⩽ 25 MHz | Maximum serial clock rate |
| SPI Mode 3 | CPOL = 1 (polarity), CPHA = 1 (phase) |
| MSB priority mode | bit order |
| 16bit Mode | Shift register/data length |

### 2.SPI Communication

If the previous command is a read request, then the SPI port supports full-duplex communication, and the external processor can write to DIN while reading DOUT, as shown in the figure below.

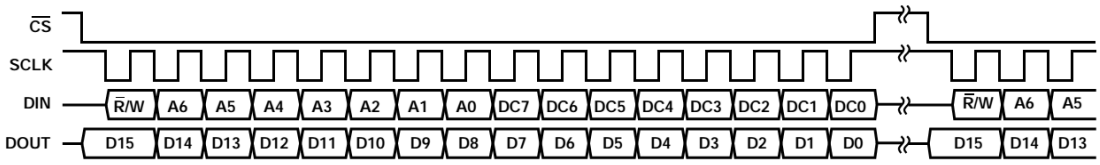


SPI read and write time sequence

### 3. Read sensor data

IMU488M automatically starts and activates page 0, which make it convenient to access data register. After accessing any other pages, should write 0x00 into the PAGE_ID register (DIN = 0x8000) to activate page 0, and prepare for subsequent data access. A single register read operation requires two 16-bit SPI cycles. In the first cycle, use the bit allocation function (in the following figure) to request to read the register's content; in the second cycle, the register's contents is outputted through DOUT. The first bit of the DIN command is 0, and then the high or low address of the register. The last 8 bits are don't care bit, but SPI requires a full 16 SCLK to receive the request. The following figure shows two consecutive register read operations. First, DIN = 0x1A00, requesting the contents of the Z_GYRO_OUT register, and then DIN = 0x1800, requesting the contents of the Z_GYRO_LOW register.

Example of SPI Read Operation


Copy Right Reserved © 2024 Nanjing Sky MEMS Technology co., ltd.
Focus on MEMS Measurement & Control Technologies, Products include:
MEMS Accelerometer MEMS Gyro Inclinometer E-compass
IMU Vertical Gyro AHRS GNSS/INS Fiber Optical Gyro

## Communication Protocol - SPI

### 4. User register memory mapping (N/A means not applicable)

| Name | R/W | PAGE_ID | Address | Default | Register Description |
|---|---|---|---|---|---|
| PAGE_ID | R/W | 0x00 | 0x00 | 0x00 | page identification |
| TEMP_OUT | R | 0x00 | 0x0E | N/A | temperature |
| X_GYRO_LOW | R | 0x00 | 0x10 | N/A | X axis gyroscope low byte output, unsigned number |
| X_GYRO_OUT | R | 0x00 | 0x12 | N/A | X axis gyroscope output, signed number |
| Y_GYRO_LOW | R | 0x00 | 0x14 | N/A | Y axis gyroscope low byte output, unsigned number |
| Y_GYRO_OUT | R | 0x00 | 0x16 | N/A | Y axis gyroscope output, signed number |
| Z_GYRO_LOW | R | 0x00 | 0x18 | N/A | Z axis gyroscope low byte output, unsigned number |
| Z_GYRO_OUT | R | 0x00 | 0x1A | N/A | Z axis gyroscope output, signed number |
| X_ACCL_LOW | R | 0x00 | 0x1C | N/A | X axis accelerometer low byte output, unsigned number |
| X_ACCL_OUT | R | 0x00 | 0x1E | N/A | X axis accelerometer output, signed number |
| Y_ACCL_LOW | R | 0x00 | 0x20 | N/A | Y axis accelerometer low byte output, unsigned number |
| Y_ACCL_OUT | R | 0x00 | 0x22 | N/A | Y axis accelerometer output, signed number |
| Z_ACCL_LOW | R | 0x00 | 0x24 | N/A | Z axis accelerometer low byte output, unsigned number |
| Z_ACCL_OUT | R | 0x00 | 0x26 | N/A | Z axis accelerometer output, signed number |
| X_MAGN_OUT | R | 0x00 | 0x28 | N/A | X axis magnetometer output |
| Y_MAGN_OUT | R | 0x00 | 0x2A | N/A | Y axis magnetometer output |
| Z_MAGN_OUT | R | 0x00 | 0x2C | N/A | Z axis magnetometer output |
| BARO_LOW | R | 0x00 | 0x2E | N/A | barometer low byte output, unsigned number |
| BARO_OUT | R | 0x00 | 0x30 | N/A | barometer output, signed number |


Copy Right Reserved © 2024 Nanjing Sky MEMS Technology co., ltd.
Focus on MEMS Measurement & Control Technologies, Products include:
MEMS Accelerometer MEMS Gyro Inclinometer E-compass
IMU Vertical Gyro AHRS GNSS/INS Fiber Optical Gyro

## Communication Protocol - SPI

### 5. Conversion formula

current temeperature = 25+ TEMP_OUT* 0.00565

X axis gyro value=0.02* X_GYRO_OUT+0.02/65536* X_GYRO_LOW

Y axis gyro value=0.02* Y_GYRO_OUT+0.02/65536* Y_GYRO_LOW

Z axis gyro value=0.02* Z_GYRO_OUT+0.02/65536* Z_GYRO_LOW

X axis accelerometer value= $0.8*10^{-3}$* X_ACCL_OUT+ $0.8*10^{-3}$/65536*X_ACCL_LOW

Y axis accelerometer value= $0.8*10^{-3}$* Y_ACCL_OUT+ $0.8*10^{-3}$/65536*Y_ACCL_LOW

Z axis accelerometer value= $0.8*10^{-3}$* Z_ACCL_OUT+ $0.8*10^{-3}$/65536*Z_ACCL_LOW

X axis magnetometer value=0.1*X_MAGN_OUT

Y axis magnetometer value=0.1*Y_MAGN_OUT

Z axis magnetometer value=0.1*Z_MAGN_OUT

Barometer value=$40*10^{-6}$* BARO_OUT+$40*10^{-6}$/65536* BARO_LOW


Copy Right Reserved © 2024 Nanjing Sky MEMS Technology co., ltd.
Focus on MEMS Measurement & Control Technologies, Products include:
MEMS Accelerometer MEMS Gyro Inclinometer E-compass
IMU Vertical Gyro AHRS GNSS/INS Fiber Optical Gyro

## Communication Protocol - UART

### 1. UART Interface

default settings: 230400bps, 8 data bit, 1 stop bit, no parity;

Protocol format:

It is composed of protocol head, protocol body and protocol end; 200Hz output; the coordinate system is defined as right front up;

DIO3 (pin1) is used as the enabling port of the serial port output, when DIO3 is high level, the serial port outputs data normally, if DIO3 is low level, the serial port will not output data.

### 2. Protocol Format

| Protocol | Byte No. | Data | Unit | Data Type | Remarks |
|---|---|---|---|---|---|
| Protocol head | 0 | 0x5a | | | |
| | 1 | 0x5a | | | |
| Protocol Body | 2~5 | X axis gyro | °/s | float | |
| | 6~9 | Y axis gyro | °/s | float | |
| | 10~13 | Z axis gyro | °/s | float | |
| | 14~17 | X axis accelerometer | g | float | |
| | 18~21 | Y axis accelerometer | g | float | |
| | 22~25 | Z axis accelerometer | g | float | |
| | 26~29 | NC | - | - | |
| | 30~33 | NC | - | - | |
| | 34~37 | NC | - | - | |
| | 38~41 | temperature | °C | float | |
| | 42~45 | barometer | mbar | float | |
| | 46~49 | X axis magnetometer | uT | float | |
| | 50~53 | Y axis magnetometer | uT | float | |
| | 54~57 | Z axis magnetometer | uT | float | |
| Protocol end | 58 | Checksum | | | Sum of 2 to 57 bytes, take the low byte |


Copy Right Reserved © 2024 Nanjing Sky MEMS Technology co., ltd.
Focus on MEMS Measurement & Control Technologies, Products include:
MEMS Accelerometer MEMS Gyro Inclinometer E-compass
IMU Vertical Gyro AHRS GNSS/INS Fiber Optical Gyro

## Reference Example to Read Data from IMU488M

Adopt DIO4 rising edge interrupt, and the sensor data reading is completed during interrupting the service subprogram.

```
void EXTI1_IRQHandler(void)
{
    uint8_t i;
    uint16_t temp;
    //the address of the sensor that is waiting to be read out its data,
    //the last 0x0000 will assure to read out the data of the last register's address
    uint16_t TxBuffer[19] = {0x0E00,0x1000,0x1200,0x1400,0x1600,0x1800,0x1A00,0x1C00,0x1E00,
                             0x2000,0x2200,0x2400,0x2600,0x2800,0x2A00,0x2C00,0x2E00,0x3000,0x0000};
    //judge whether it generates the interrupt
    if (LL_EXTI_IsActiveFlag_0_31(LL_EXTI_LINE_1) != RESET)
    {
        LL_EXTI_ClearFlag_0_31(LL_EXTI_LINE_1);   //clear interrupt flag bit
            LL_GPIO_ResetOutputPin(GPIOB,LL_GPIO_PIN_0);   //pull down SPI select
            for(uint8_t j=0;j<100;j++){};  //wait for 5us
            for(i=0;i<19;i++){   //recycled reading
                //waiting for the transmitting buffer is empty
                while(LL_SPI_IsActiveFlag_TXE(SPI1)==RESET){};
                // transmit the register's address
                LL_SPI_TransmitData16(SPI1,TxBuffer[i]);
                //waiting for the receiving buffer is not empty
                while(LL_SPI_IsActiveFlag_RXNE(SPI1)==RESET){};
                // receive the data, the first reading data is invalid
                rxDataFromSPI[i] = LL_SPI_ReceiveData16(SPI1);
                for(int j=0;j<100;j++);  //delay 5us, very important
            }
        DataFromSPI.temp = 25+rxDataFromSPI[1]*0.00565f;   // the sensor's data analysis
        DataFromSPI.gyro[0] = 0.02f*rxDataFromSPI[3];
        DataFromSPI.gyro[1] = 0.02f*rxDataFromSPI[5];
        DataFromSPI.gyro[2] = 0.02f*rxDataFromSPI[7];
        DataFromSPI.accel[0] = (rxDataFromSPI[9]*65536+rxDataFromSPI[8])*0.00001220703125*0.001;
        DataFromSPI.accel[1] = (rxDataFromSPI[11]*65536+rxDataFromSPI[10])*0.00001220703125*0.001;
        DataFromSPI.accel[2] = (rxDataFromSPI[13]*65536+rxDataFromSPI[12])*0.00001220703125*0.001;
        DataFromSPI.mag[0] = rxDataFromSPI[14]*0.1;
        DataFromSPI.mag[1] = rxDataFromSPI[15]*0.1;
        DataFromSPI.mag[2] = rxDataFromSPI[16]*0.1;
        DataFromSPI.barometer = rxDataFromSPI[18]*40e-6f;
        //waiting for the transmitting data is completed
        while(LL_SPI_IsActiveFlag_BSY(SPI1)==SET){};
        for(uint8_t j=0;j<50;j++){};      //  delay a certain period time
        LL_GPIO_SetOutputPin(GPIOB,LL_GPIO_PIN_0);  // chip select pull-up
    }
}
```


Copy Right Reserved © 2024 Nanjing Sky MEMS Technology co., ltd.
Focus on MEMS Measurement & Control Technologies, Products include:
MEMS Accelerometer MEMS Gyro Inclinometer E-compass
IMU Vertical Gyro AHRS GNSS/INS Fiber Optical Gyro

# IMU488M

## High Performance Inertial Measurement Unit

## IMU488M Evaluation Board

IMU488M evaluation board is a PC-USB Inertial MEMS Evaluation System, it provides a Windows-compatible evaluation system for IMU488M. It is composed of PCB circuit, aluminum base, and data converter cable. The IMU488M evaluation board is designed to facilitate customers to quickly familiarize themselves with the usage and evaluation of IMU488M.

IMU488M has two data output mode: UART output and SPI output, these two modes are selected by J3 and J4(see the following figures) . When testing the UART output mode, the jumper caps of J3 and J4 can be selected to connect to the serial port output mode. The USB connector provided by the evaluation board is connected to the computer, and the serial port output data quality can be tested through the computer; When testing the SPI reading mode, the MCU on the evaluation board will read the data of IMU488M through SPI, and smooth the data, and upload it to the computer through USB interface. At this time, it is necessary to select the jumper caps of J3 and J4 to enter the SPI reading mode.


Copy Right Reserved © 2024 Nanjing Sky MEMS Technology co., ltd.
Focus on MEMS Measurement & Control Technologies, Products include:
MEMS Accelerometer MEMS Gyro Inclinometer E-compass
IMU Vertical Gyro AHRS GNSS/INS Fiber Optical Gyro

# IMU488M

## High Performance Inertial Measurement Unit

## Operation Procedures of IMU488M Evaluation Board

1. IMU488M module is connected to the IMU488M evaluation board through 2X12 pins connector, and the limit column and limit hole at the base of the evaluation board can constrain the position of the IMU488M module, and the IMU488M module can be fixed to the evaluation board base with 4 screws. As shown in Figure 1:

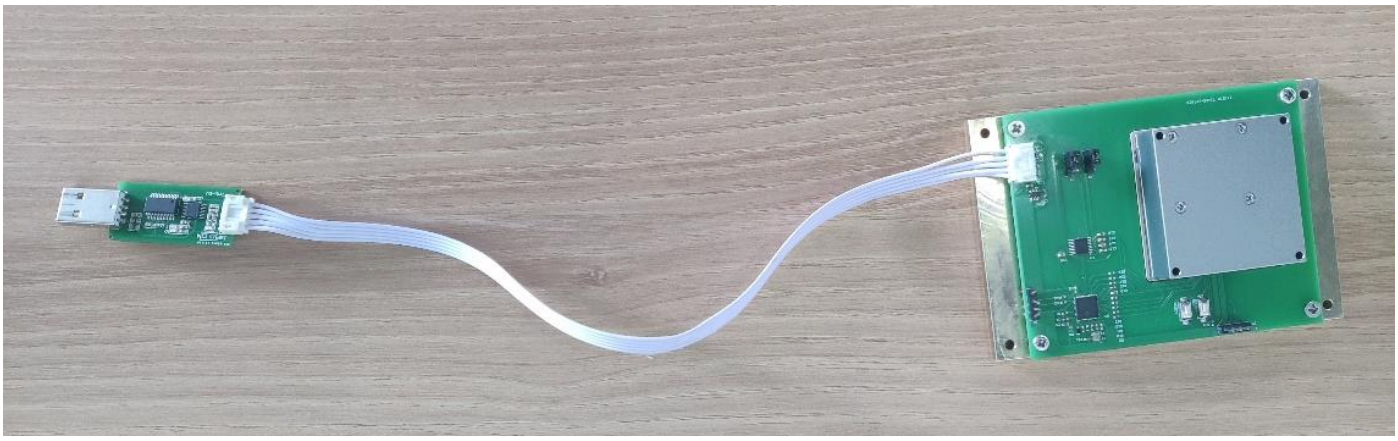

Figure 1: install IMU488M module into the IMU488M evaluation board

2. Connect the evaluation board to the computer. After connecting, the power light at the USB connector on the evaluation board remains on, and the data receiving indicator light turns on and off based on whether there has the received data or not.

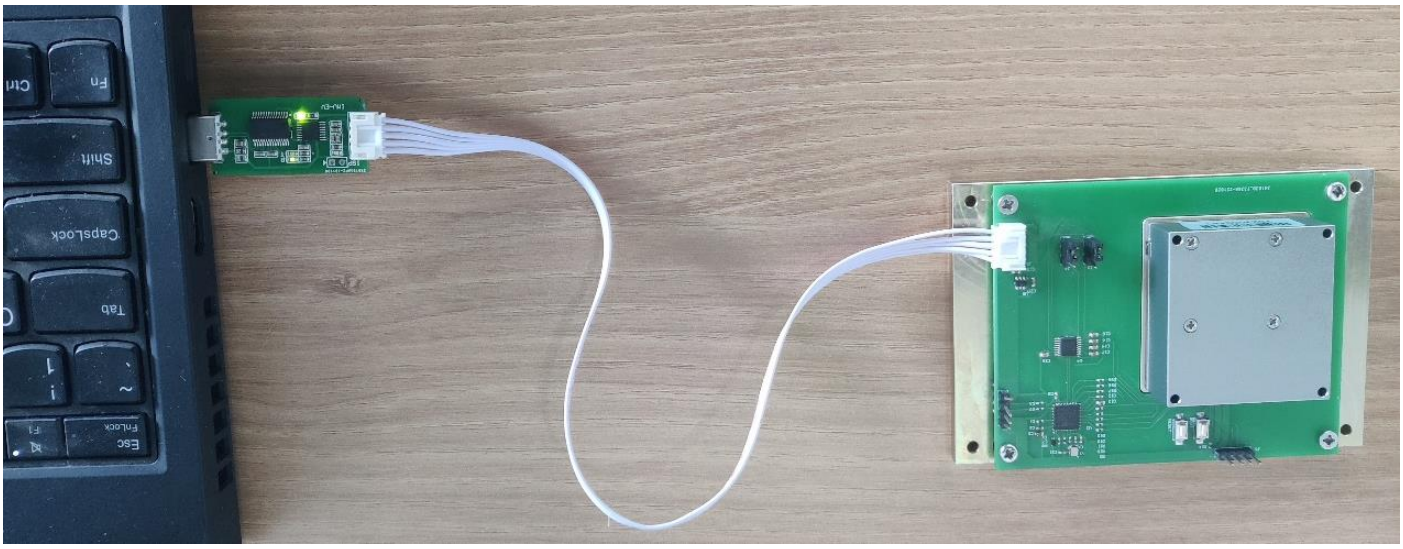

Figure 2: The evaluation board is connected to the computer (the upper light is power, and the lower light is the data receiving indicator)


Copy Right Reserved © 2024 Nanjing Sky MEMS Technology co., ltd.
Focus on MEMS Measurement & Control Technologies, Products include:
MEMS Accelerometer MEMS Gyro Inclinometer E-compass
IMU Vertical Gyro AHRS GNSS/INS Fiber Optical Gyro

## Operation Procedures of IMU488M Evaluation Board

3. Adjust the positions of J3 and J4 as needed, as shown in the following figure. When the jumper cap is on the left, the serial output mode is selected. When the jumper cap is on the right, the SPI read serial transmission mode is selected.

Figure 3: J3 and J4 jumper cap selection (left for serial port mode, right for SPI mode)

4. Select a suitable evaluation program for data reading operation. Figure 4 shows the evaluation program in serial port output mode on the left, and Figure 4 shows the evaluation program in SPI input serial port output mode on the right.

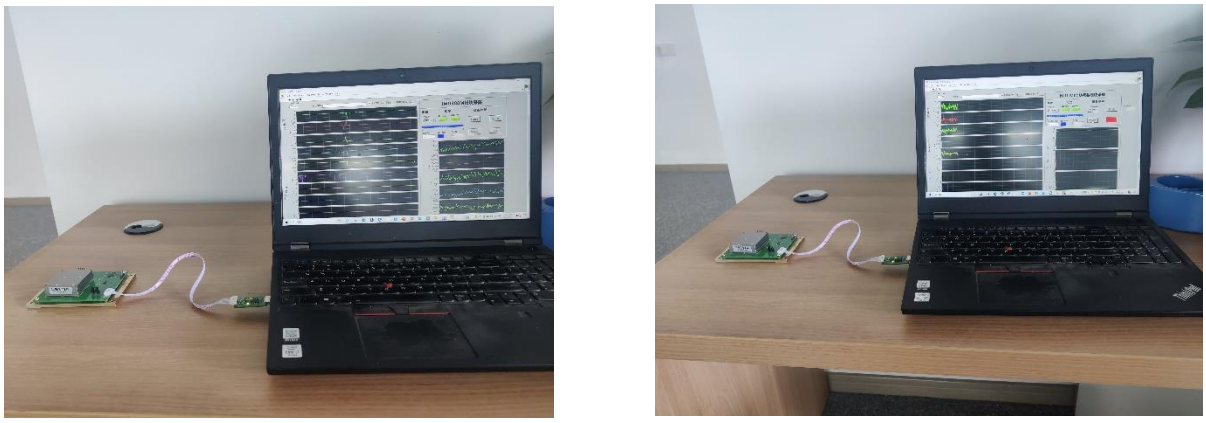

Figure 4: Upper computer display (left for serial port output mode, right for SPI input serial port output mode)


Copy Right Reserved © 2024 Nanjing Sky MEMS Technology co., ltd.
Focus on MEMS Measurement & Control Technologies, Products include:
MEMS Accelerometer MEMS Gyro Inclinometer E-compass
IMU Vertical Gyro AHRS GNSS/INS Fiber Optical Gyro

# IMU488M

## High Performance Inertial Measurement Unit

## Revision history

| Data | Version | Changes |
|---|---|---|
| 2024-12-4 | V1.0 | Initial release. |


Copy Right Reserved © 2024 Nanjing Sky MEMS Technology co., ltd.
Focus on MEMS Measurement & Control Technologies, Products include:
MEMS Accelerometer MEMS Gyro Inclinometer E-compass
IMU Vertical Gyro AHRS GNSS/INS Fiber Optical Gyro